RBC PROPRIETARY AND CONFIDENTIAL INFORMATION
This document is the property of REGAL BELOIT CORPORATION ("RBC") including its subsidiaries and divisions and contains proprietary information of RBC. This document is loaned on the express condition that neither it nor the information contained therein shall be disclosed to others without the express written consent of RBC, and that the information shall be used by the recipient only as approved expressly by RBC. This document shall be returned to RBC upon its request. This document may be subject to certain restrictions under U.S. export control laws and regulations.

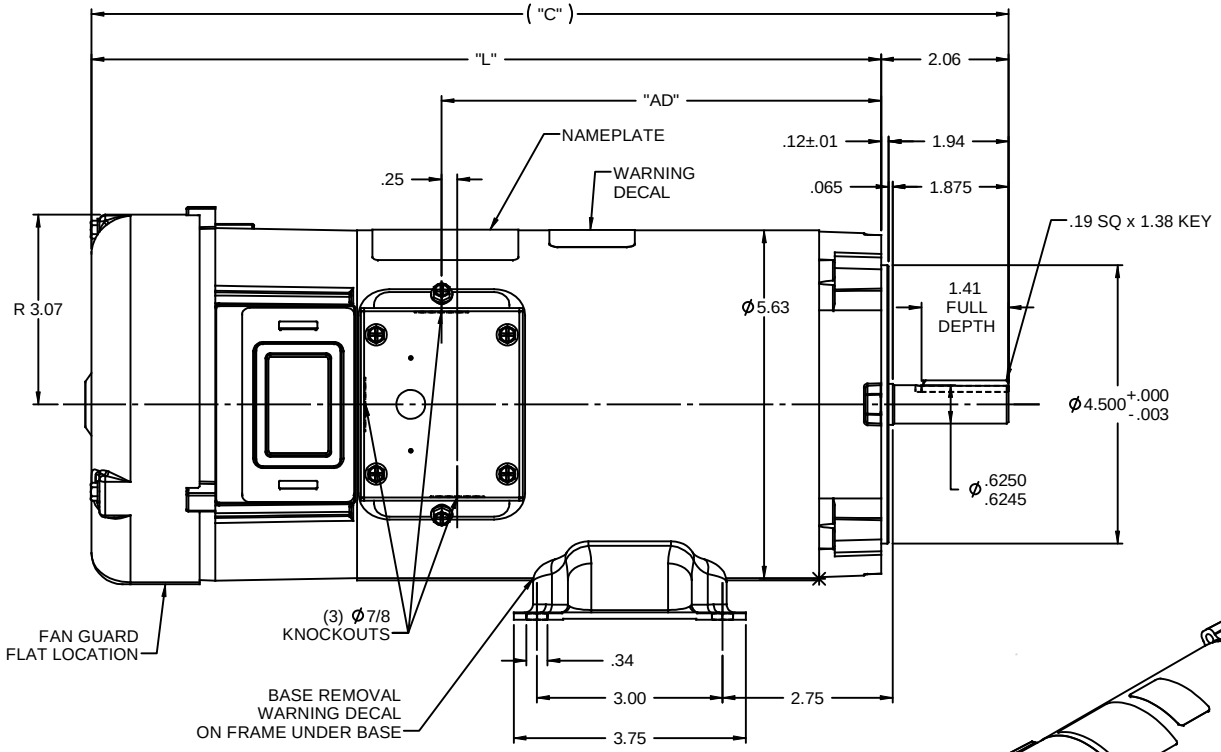

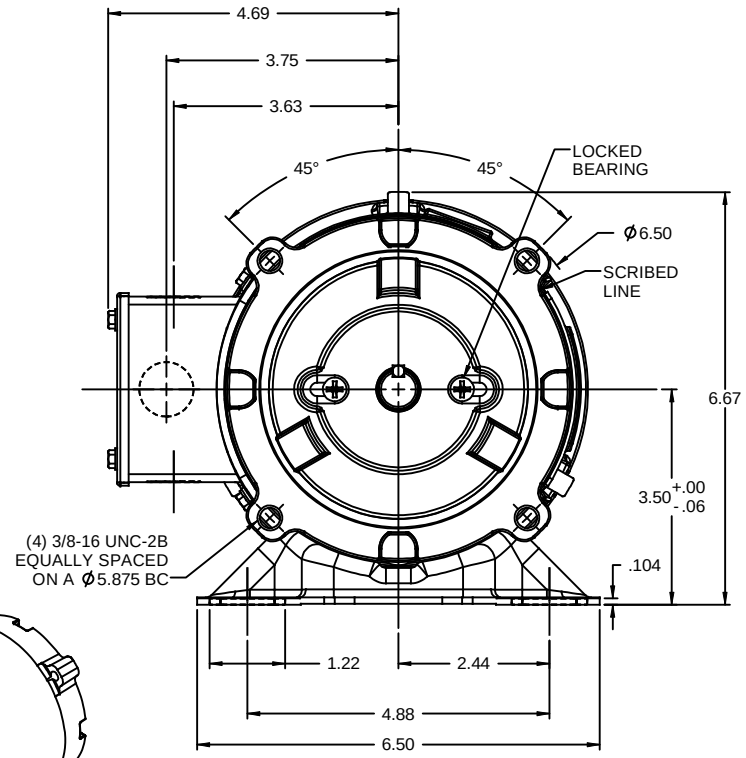

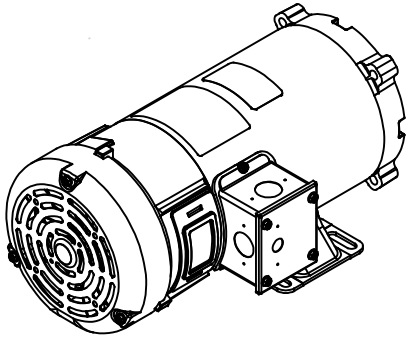

CATALOG No.	"C"	"L"	"AD"	VOLTS	H.P.	RPM
109100.00	15.82	13.76	8.10	90	3/4	1140
109099.00	14.32	12.26	6.60	90	1/2	1140
109098.00	12.82	10.76	5.10	90	1/3	1140
108265.00	15.32	13.26	7.60	180	1 1/2	2500
108092.00	16.82	14.76	9.10	180	1 1/2	1750
108023.00	14.82	12.76	7.10	180	1	1750
108022.00	14.82	12.76	7.10	90	1	1750
108021.00	13.82	11.76	6.10	180	1	2500
108020.00	13.32	11.26	5.60	90	1	2500
108019.00	13.82	11.76	6.10	180	3/4	1750
108018.00	13.82	11.76	6.10	90	3/4	1750
108017.00	12.82	10.76	5.10	180	3/4	2500
108016.00	12.82	10.76	5.10	90	3/4	2500
108015.00	12.82	10.76	5.10	180	1/2	1750
108014.00	12.82	10.76	5.10	90	1/2	1750

NOTES:
1) MAXIMUM FACE RUNOUT .004 T.I.R.
2) MAXIMUM PILOT ECCENTRICITY .004 T.I.R.
3) PERMISSIBLE SHAFT RUNOUT .002 T.I.R.
4) GASKETS THROUGHOUT

NO	REVISION	BY & DATE	CHK
05	ADDED NOTE ABOUT FAN GUARD FLAT LOCATION, ISAAC 09-4813	IPG 12/4/2009	
04	CAT. # 108092.00: "C" WAS 17.32, "L" WAS 15.26, "AD" WAS 9.60, ISAAC 09-1828	IPG 5/14/2009	SK
03	ADDED DATA FOR VARIOUS CAT. NUMBERS, COMPLETED TABLE	IPG 9/15/2008	BC

TOLERANCES UNLESS SPECIFIED

DEC	INCHES
.X	±.1
.XX	±.03
.XXX	±.005
.XXXX	±.0005
ANG	±1/2°

LEESON ELECTRIC MOTORS GEARMOTORS AND DRIVES

TITLE OUTLINE
48 FRAME DC - S56C MOUNT

MAT'L
FINISH

DRAWN RWS 1/8/08
CHK IPG 1/9/08
APPR
SCALE 1:2
REF 031189.00
FMF 108022.75
PAGE OF

THIRD ANGLE PROJECTION

RFP
PREV
NETWORK FILE NAME

SIZE B
DRAWING NO 031879
REV 05

12/4/2009 11:37:27 AM